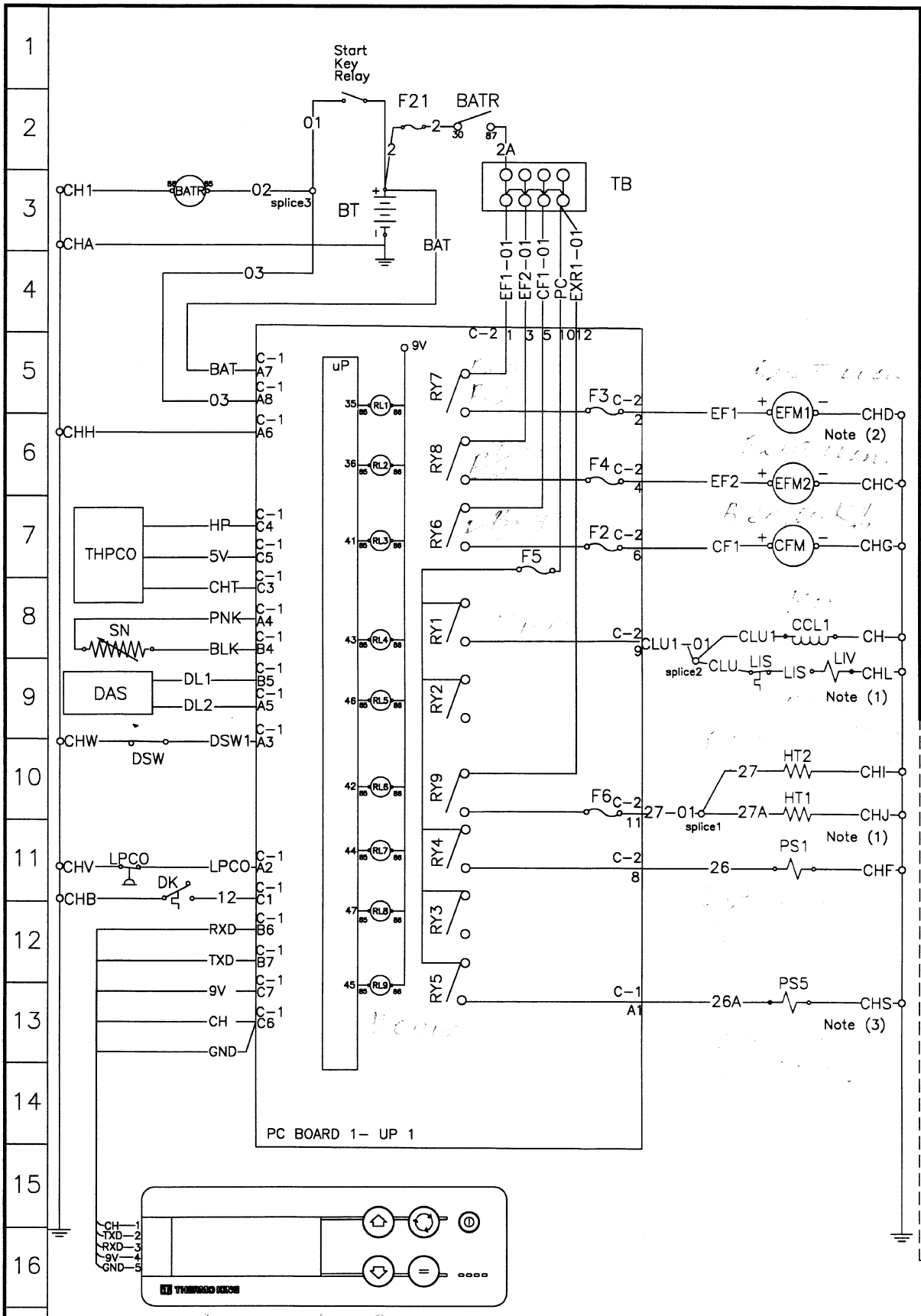

ITEM	PART NUMBER	REV.	DESCRIPTION	QTY.	MAT'L SPEC'S
			LIST OF MATERIAL		

THERMO KING EUROPE

Ref. 1E17883

DRAWING NUMBER 1E17884 REV. A

DIAGRAM SCHEMATIC
V100/V-200/300/MAX-10/30 SINGLE TEMP
12V/24V

SHEET 1 OF 1

MATERIAL:

FINISH:

		DATE
DRAWN	M.J.Nus	23_June_03
CHECKED	Lorenzo G.	25_Sept_03
APPROVED	M.J.Nus	25_Sept_03

THIS PRINT SUPERSEDES ANY OF EARLIER DATE. DESTROY SAME.

SCALE

THIS DOCUMENT CONTAINS PROPRIETARY INFORMATION OF THE THERMO KING CORPORATION. IT IS TRANSMITTED TO YOU IN CONFIDENCE AND TRUST, AND IN ITS PRINTED FORM, IT MAY NOT BE REPRODUCED IN WHOLE OR IN PART TO OTHERS OR USED FOR OTHER PURPOSES WITHOUT THE PRIOR WRITTEN PERMISSION OF THE THERMO KING CORPORATION, WHICH IS TRANSMITTED WITH THIS DOCUMENT.

IDENT.	LEGEND	AREA
BT	BATTERY	3
CCL1	COMPRESSOR CLUTCH	8
CFM	CONDENSER FAN MOTOR	7
DAS	DATA LOGGER	9
DK	DEFROST TEMP. THERM.	11
DSW	DOOR SWITCH	9,10
EFM1	EVAPORATOR FAN MOTOR	5
EFM2	EVAPORATOR FAN MOTOR	6
HT1	HEATERS 1	10
HT2	HEATERS 2	10
LIS	LIQUID INJECTION SWITCH	9
LIV	LIQUID INJECTION VALVE	9
LPCO	LOW PRESSURE CUTOUT SWITCH	11
PS1	HOST DEFROST HOT GAS SOLENOID VALVE	11
PS5	HEAT PILOT SOLENOIDE	13
SN	SENSOR	8
THPCO	HIGH PRESSURE TRANSDUCER	7,8
TB	TERMINAL BOARD	3
FUSES:		
F2	CONDENSER FAN	7
F3	EVAPORATOR FAN 1	5,6
F4	EVAPORATOR FAN 2	6
F5	CCL1,CCL2,LIS,LIV, PS1,CMC,PS5	7,8
F6	HT1,HT2	10,11
F21	GENERAL FUSE	2
RELAYS:		
RY7	EVAPORATOR FAN 1	5,6
RY8	EVAPORATOR FAN 2	6
RY6	CONDENSER FAN 1	7
RY1	CLUTCH 1, LIS,LIV	8
RY9	HT1,HT2	10,11
RY4	PS1	11
RY5	PS5	12,13
BATR	BATTERY RELAY	2,3
ELECTRONIC SYSTEM:		
UP1	CONTROLLER PLATFORM 1	4-15
DISPLAY	IN CAB BOX	15,16

F21: NEAR BATTERY, IN TRUCK
(*)F2,F3,F4,F5,F6: IN ELECTRIC PC BOARD

Wire In Cab Box		Fuses						
		Power	F21	F2 (*)	F3 (*)	F4 (*)	F5 (*)	F6 (*)
TXD	blue	12A	40A	15A	15A	15A	20A	10A
RXD	black							
9V	red							
CH	yel/gr							
GND	shielded	24V		10A	10A	10A	10A	7.5A

Note (1): LIS, LIV and HT1,HT2 only for MAX units.
HT2: does not connect for ES100 evaporator.
Note (2): EF2: does not connect for MULTITEMP units.
EF2: does not connect for ES100 evaporator.
Note (3): PS5 only for HEAT OPTION.

REVISIONS			
A	504001	23.06.03	MN
RELEASED			